A 110μW 10Mb/s eTextiles Transceiver for Body Area Networks with Remote Battery Power

Patrick P. Mercier and Anantha P. Chandrakasan

Massachusetts Institute of Technology

ISSCC 2010

Vision: Personal Telehealth for Continuous Ambulatory Monitoring

- Opportunity for personal health monitoring to **reduce costs** and **improve quality of health care**
- Body-worn sensor nodes must be **light** & **unobtrusive**
- Use a **Body Area Network (BAN)** for sensor communication
  - Energy-rich local relay can communicate with cellular/ WiFi network

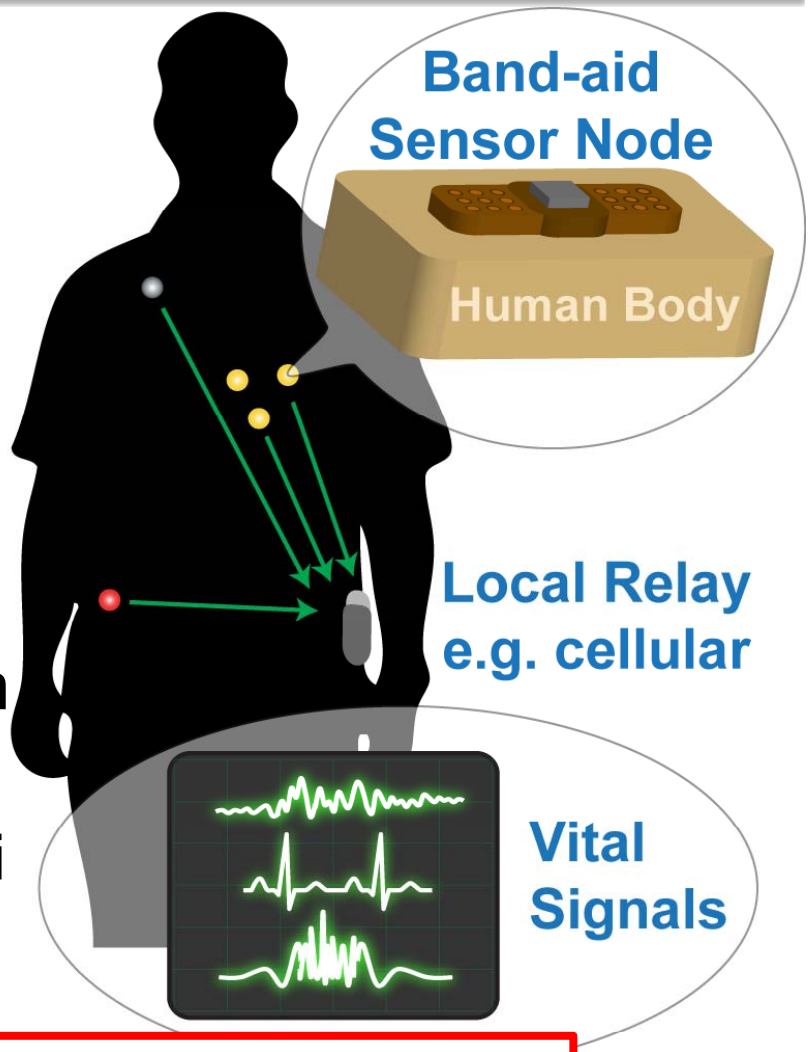

Move complexity away from the locations where size and weight are limited

1m BAN Communication Options

Option #	PROS	CONS
1. Wired	Low power, secure	Obtrusive, aesthetics
2. Wireless	Mobility	Battery life/size, security
3. Body-coupled communication (BCC)	Lower power than wireless, secure	Still much higher power than wired

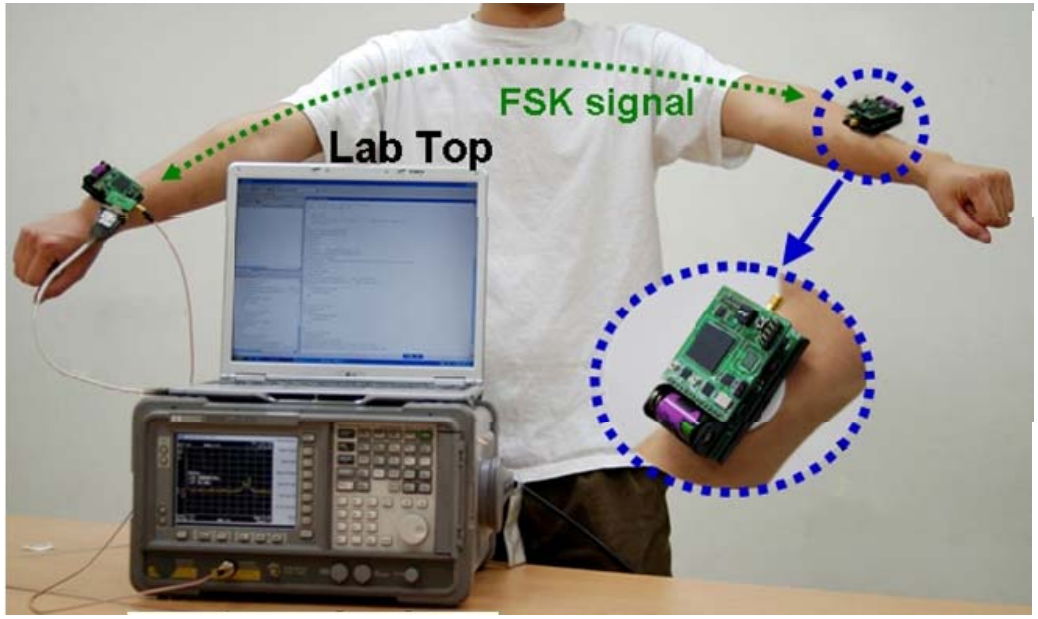

Image from: [Cho, JSSC 09]
Other work: [Fazzi, ISSCC 09]

1m BAN Communication Using Electronic Textiles (eTextiles)

- PROS:
  - Secure
  - Ultra-low-power
  - Good aesthetics
- CONS:
  - Requires patients to wear specific clothing

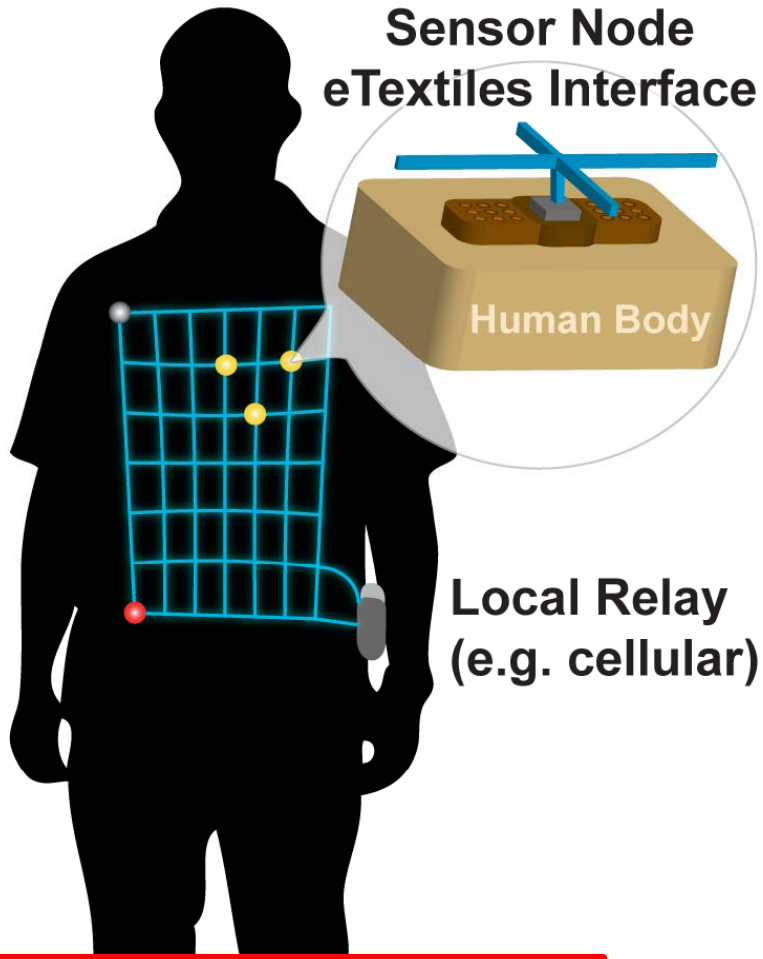

Secure, low-power communication
→ small sensor nodes with long battery life

Implemented eTextiles System

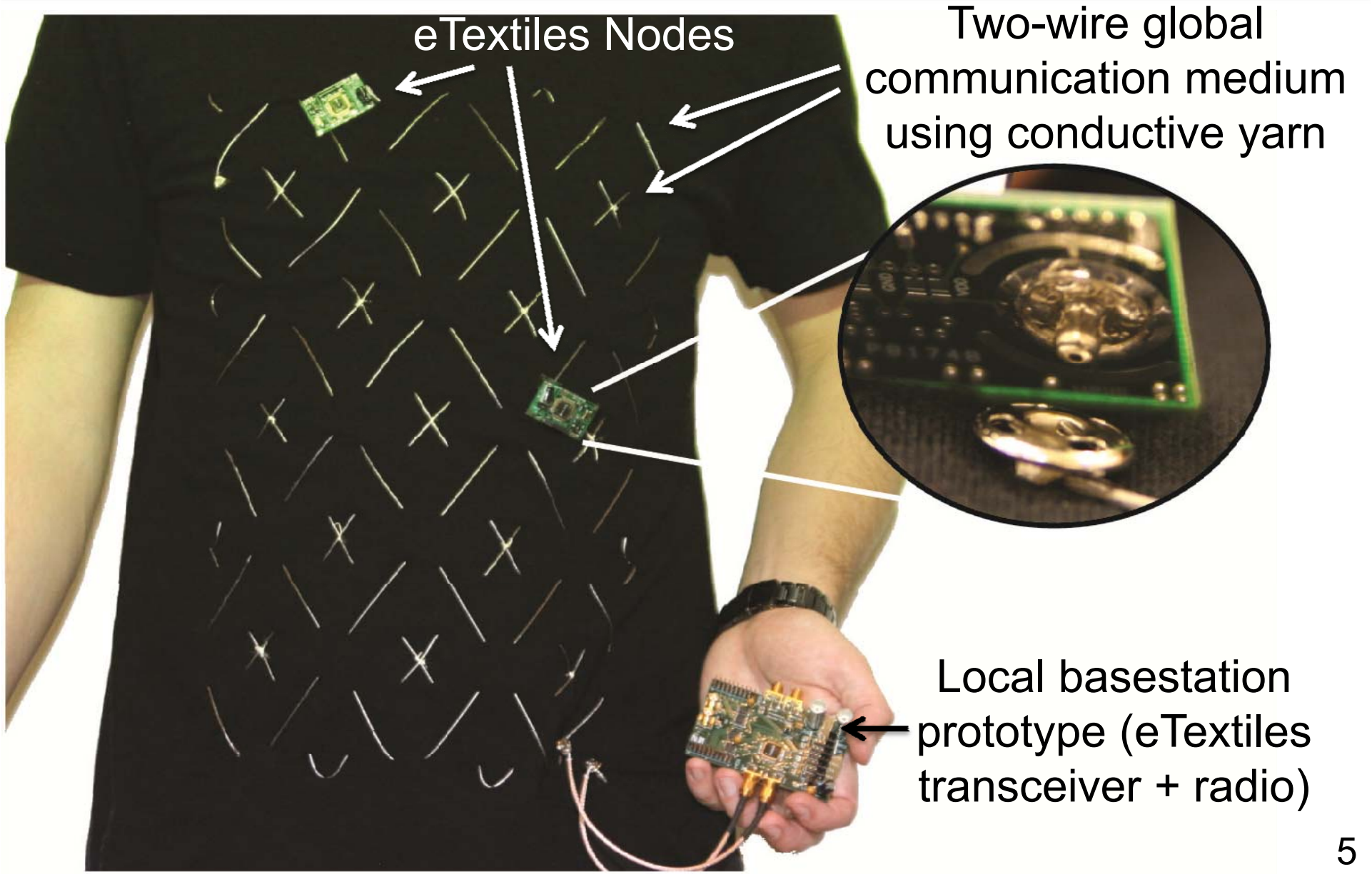

Advantages of Two-Wire Interface

- **Differential signaling**
  - Wireless and BCC are **inherently single-ended**; require signaling robustness against interferers
    - Higher-complexity modulation or avoidance techniques
  - Wired differential communication can use simpler modulation (e.g. OOK) and be resilient to interferers
- **Remote charging**
  - Greater than 95% power transfer efficiency over 1m (compared to **<** 55% for wireless over 1cm)
  - Reduces energy storage requirements on size-constrained sensor nodes

Significantly increased efficiency of information and power transfer

Networking Configuration

- Basestation (BS) eTextiles transceiver configured as master access point on **global (broadcast) medium**
  - Sensor nodes configured as **slave** devices with unique ID
- TDMA-based multi-access
  - **Ternary** (3-level) signaling eases packet detection
- Packet diagram:

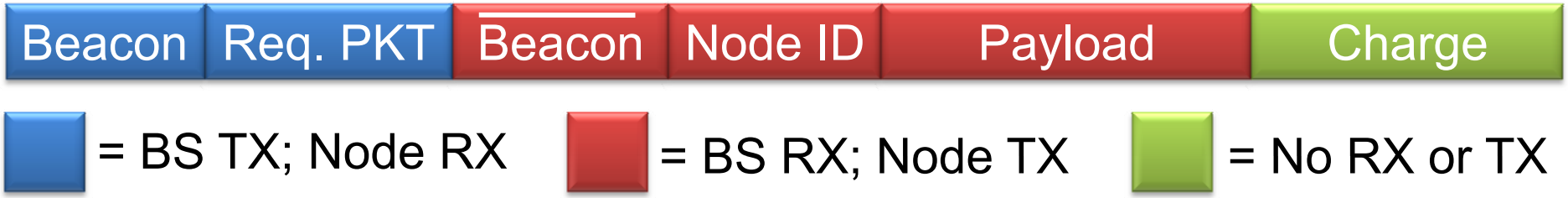

- "Request Packet" code can be a discovery code to dynamically accept new nodes to the network

eTextiles Transceiver Block Diagram

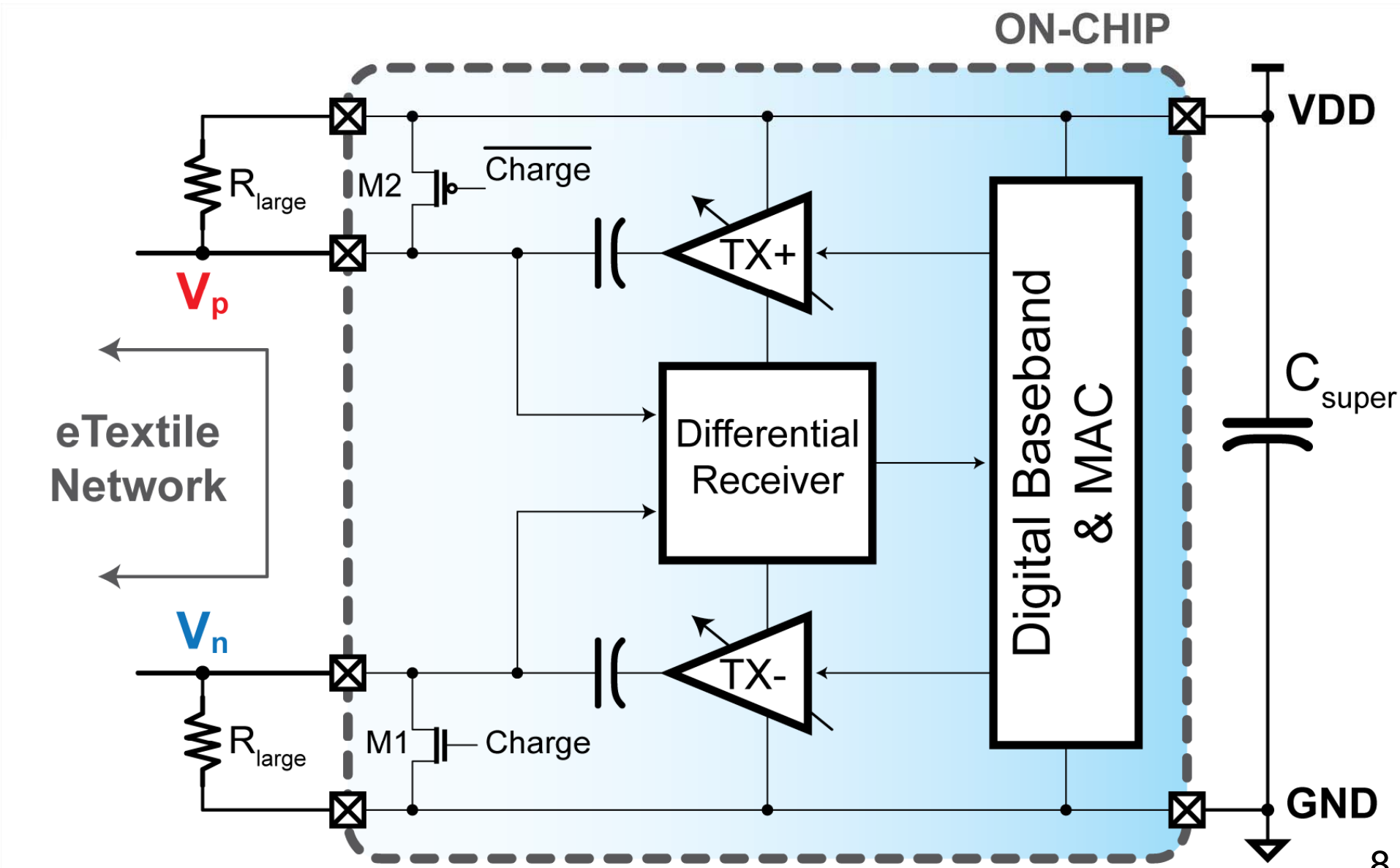

Supply-Rail-Coupled Differential Ternary Signaling

- Capacitive coupling onto rails that are floating at GND and V_{DD}
  - **Energy-efficient** low-swing signaling [Ho, ISSCC 07]

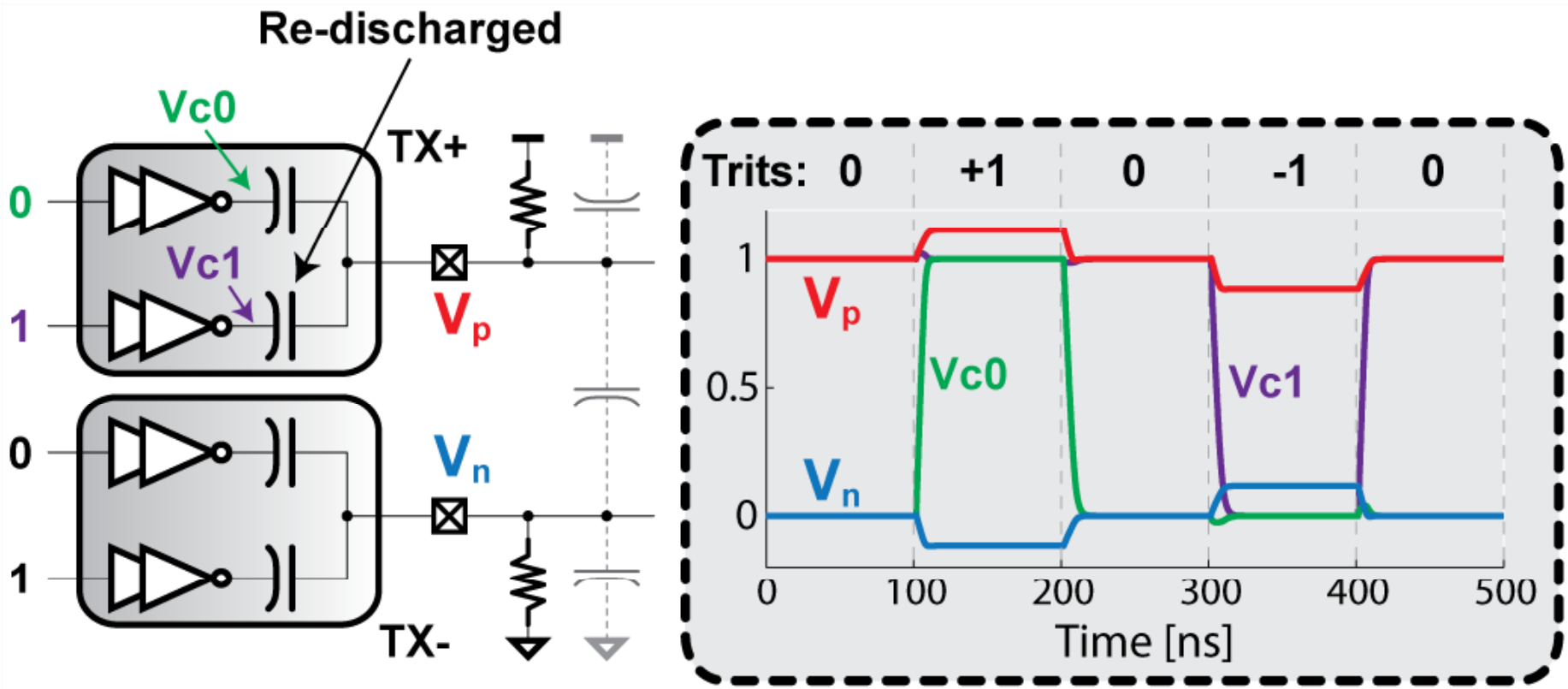

Transmitter Implementation

- Binary-weighted parallel tri-state inverters and coupling capacitors for programmable voltage swing

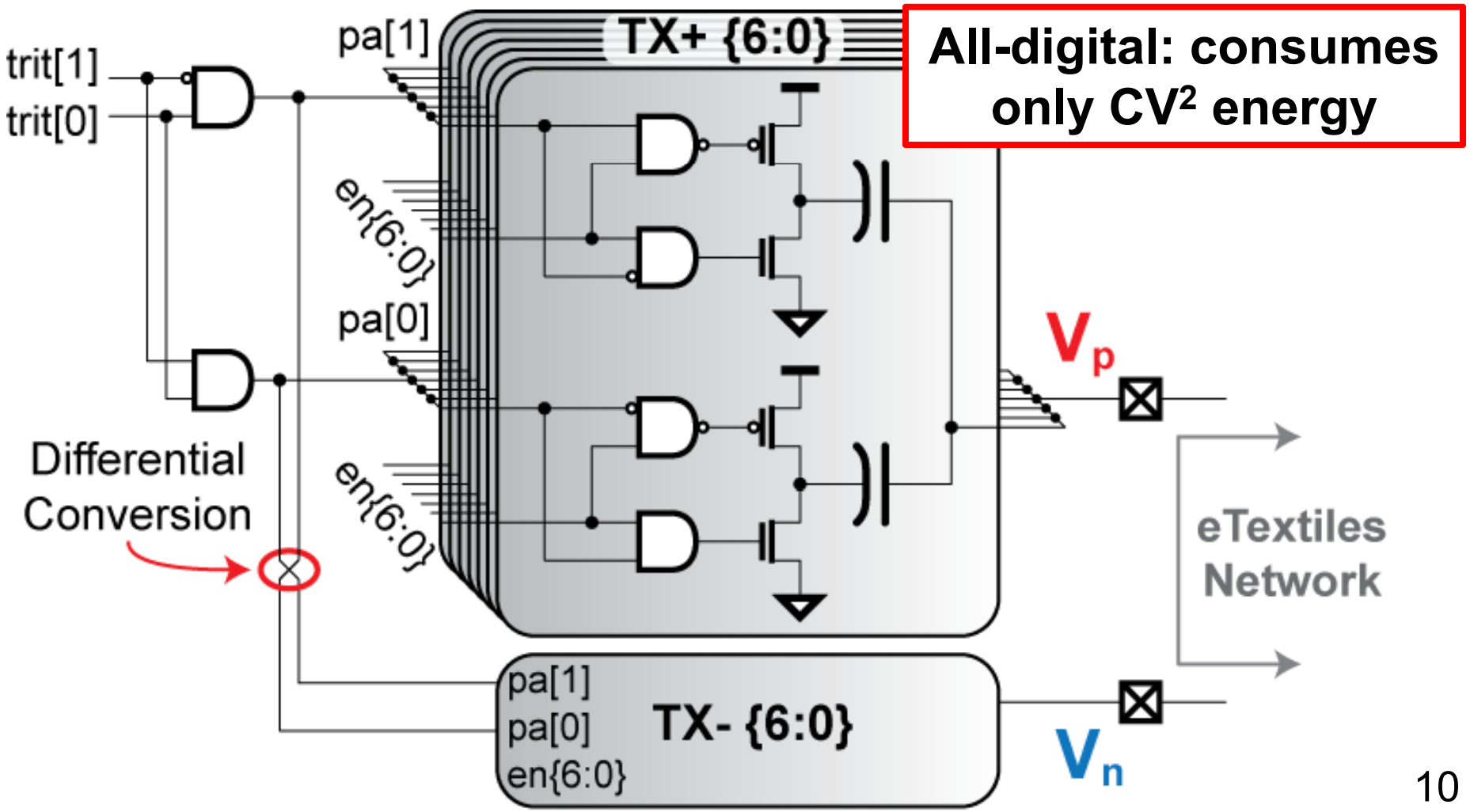

Receiver Front-End

- Ultra-low path loss → high SNR

  → **Direct supply-rail-coupled sampling @ 10Mb/s**

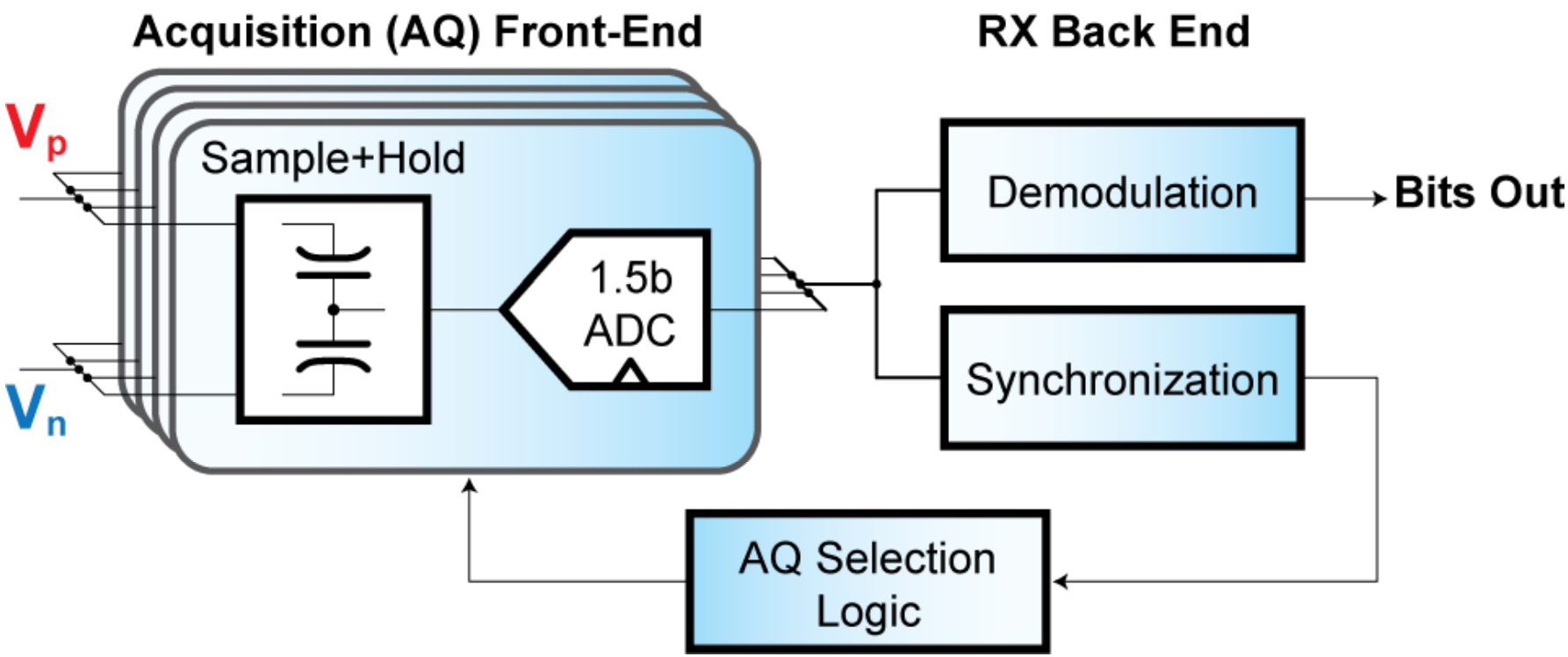

No static bias currents, only CV^2 energy

Acquisition (AQ) Front-End: Supply-Rail-Coupled Sampling & 1.5b ADC

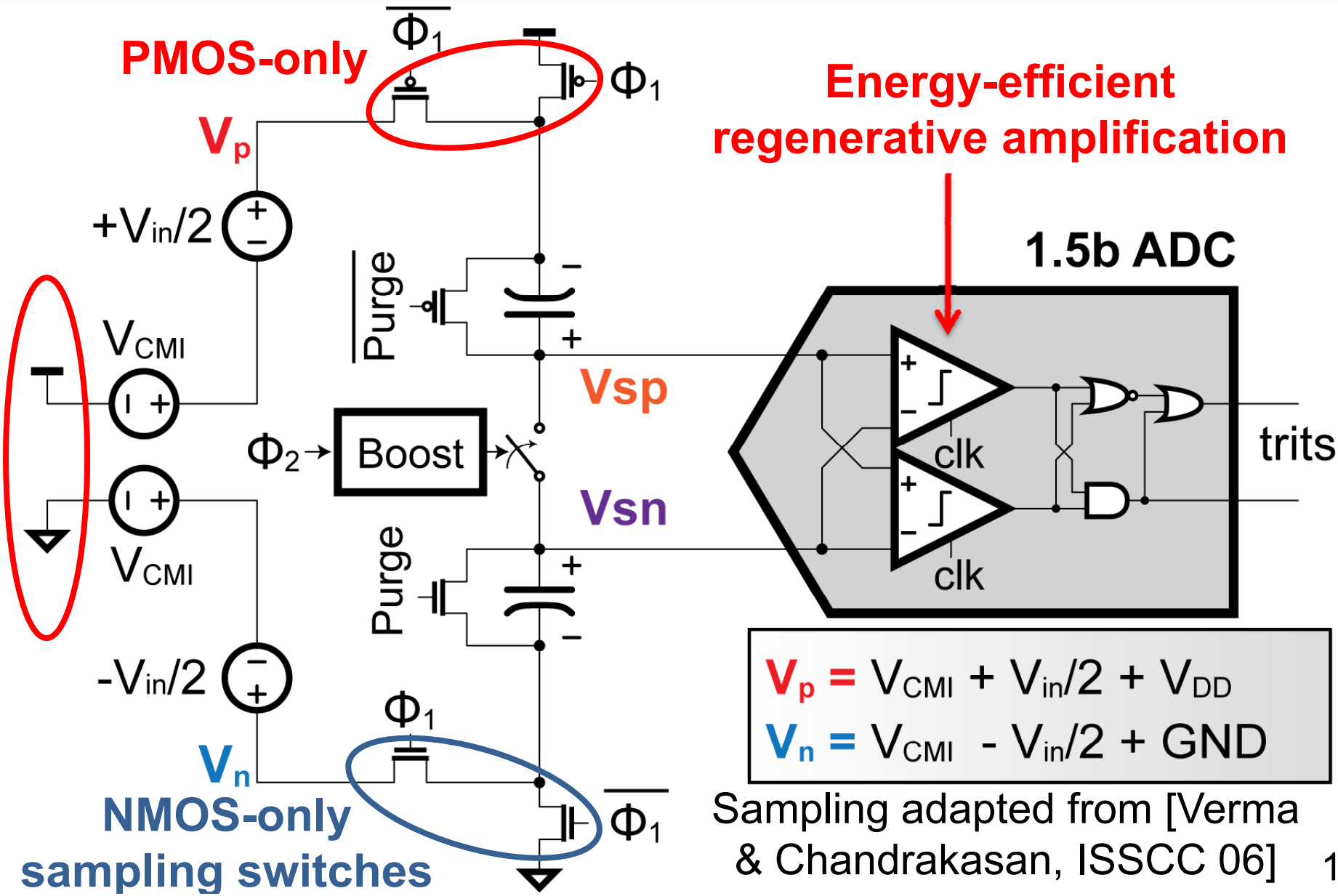

$V_p = V_{CMI} + V_{in}/2 + V_{DD}$

$V_n = V_{CMI} - V_{in}/2 + GND$

Sampling adapted from [Verma & Chandrakasan, ISSCC 06]

Supply-Rail-Coupled Sampling (1): Purge & Preset

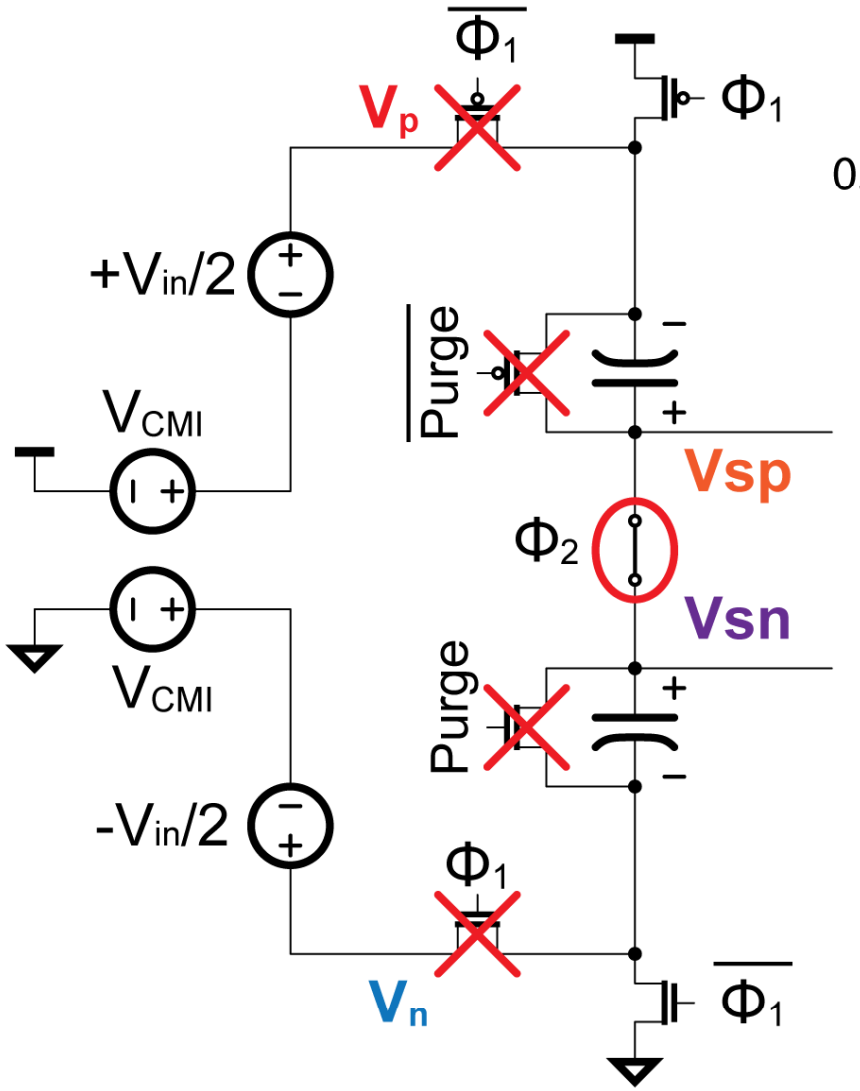

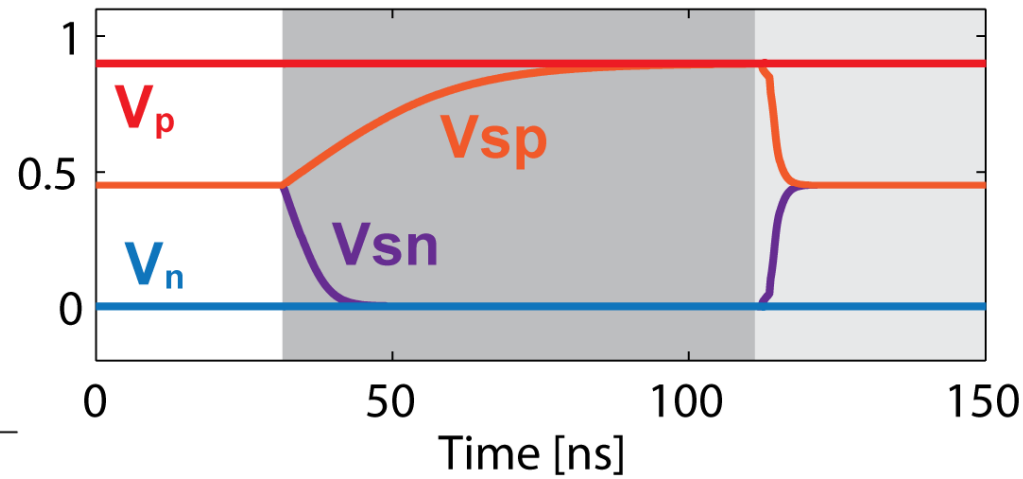

Purge Phase*:	Φ_1=0;	Vsp = Vdd
	Φ_2=0;	Vsn = 0
Preset Phase:	Φ_1=0;	Vsp = Vdd/2
	Φ_2=1;	Vsn = Vdd/2

***Purging only required once per packet**

Supply-Rail-Coupled Sampling (2): Sample & Hold

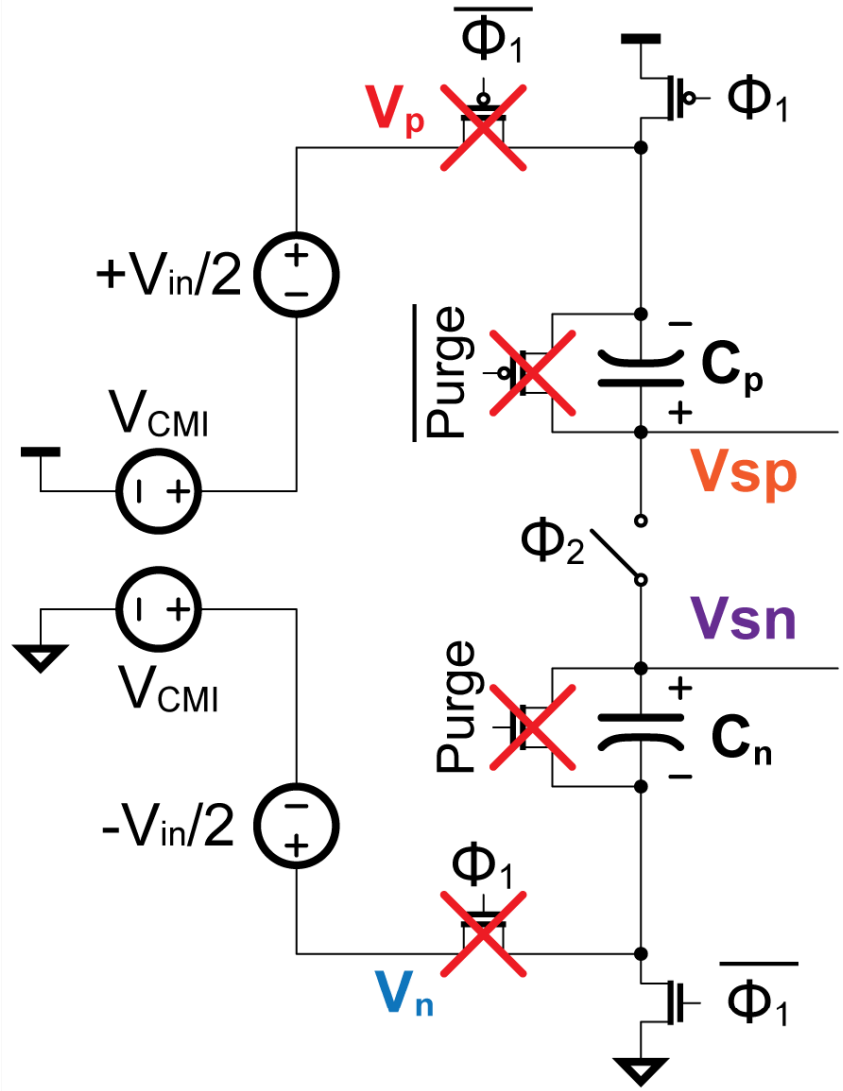

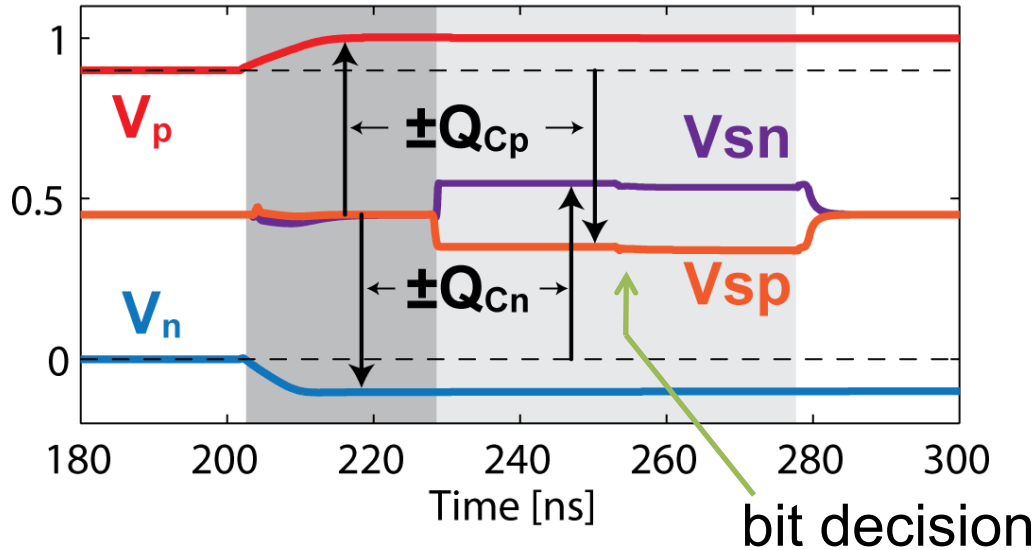

Sample: $\Phi_1=1$; Vsp = $V_{DD}/2$

$\Phi_2=1$; Vsn = $V_{DD}/2$

$Q_{Cp} = -C_p(V_{DD}/2 + V_{in}/2 + V_{CMI})$

$Q_{Cn} = C_n(V_{DD}/2 - V_{in}/2 + V_{CMI})$

Hold: $\Phi_1=0$; Vsp = $V_{DD}/2 - V_{in}/2 - V_{CMI}$

$\Phi_2=0$; Vsn = $V_{DD}/2 + V_{in}/2 - V_{CMI}$

Common-mode-interference-independent sampling

1.5bit (Ternary) Flash-like ADC

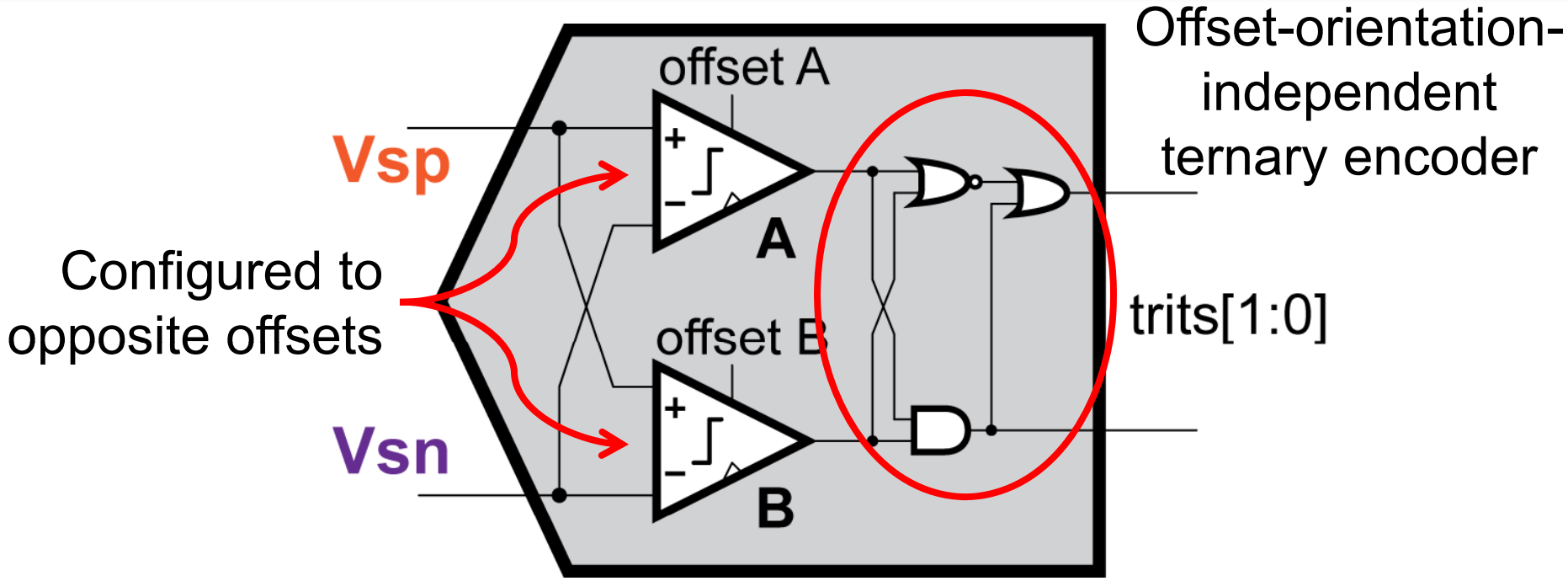

Comparator output	|Vsp–Vsn| < |off.| (noise)	Vsp–Vsn > |off.|	Vsn–Vsp > |off.|
A (+offset)	0	0	1
B (-offset)	1	0	1
Trits output	**'0'**	**'+1'**	**'-1'**

Comparator Implementation

- Modified regenerative Strong-ARM-type latch
- 8b differential pair and current source DAC
  - Offset configurability of ±60mV at V_{DD} = 0.9V

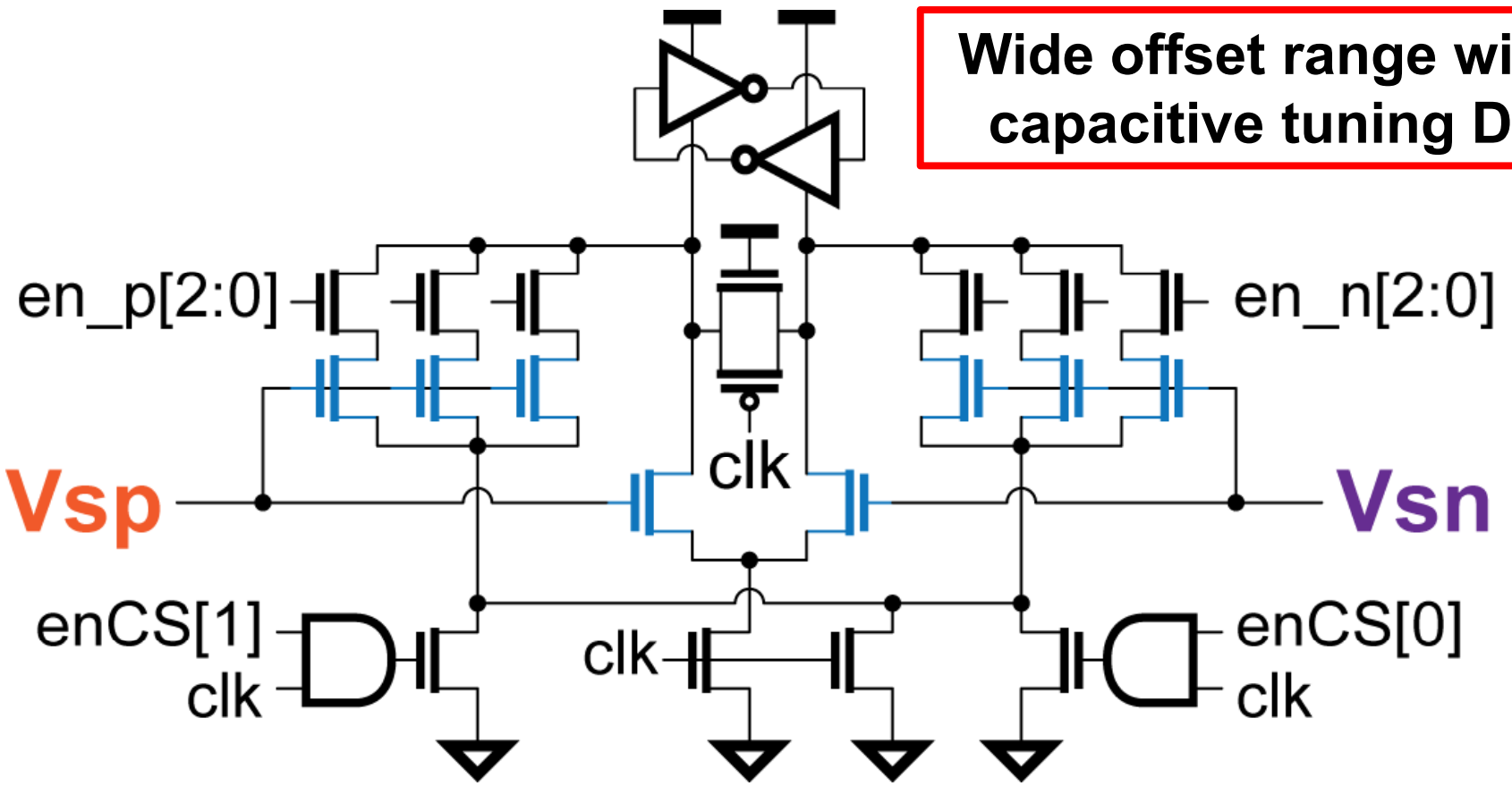

Measured Comparator-Configuration Redundancy Results

Offset Configurability

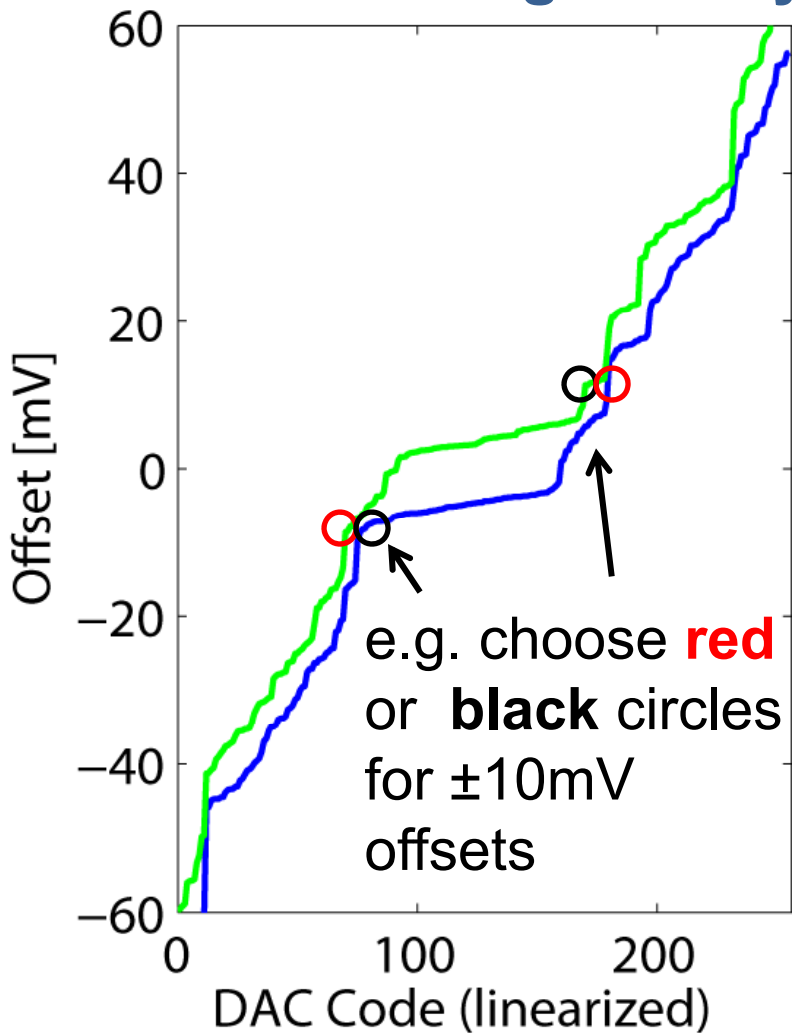

Calibration Statistics

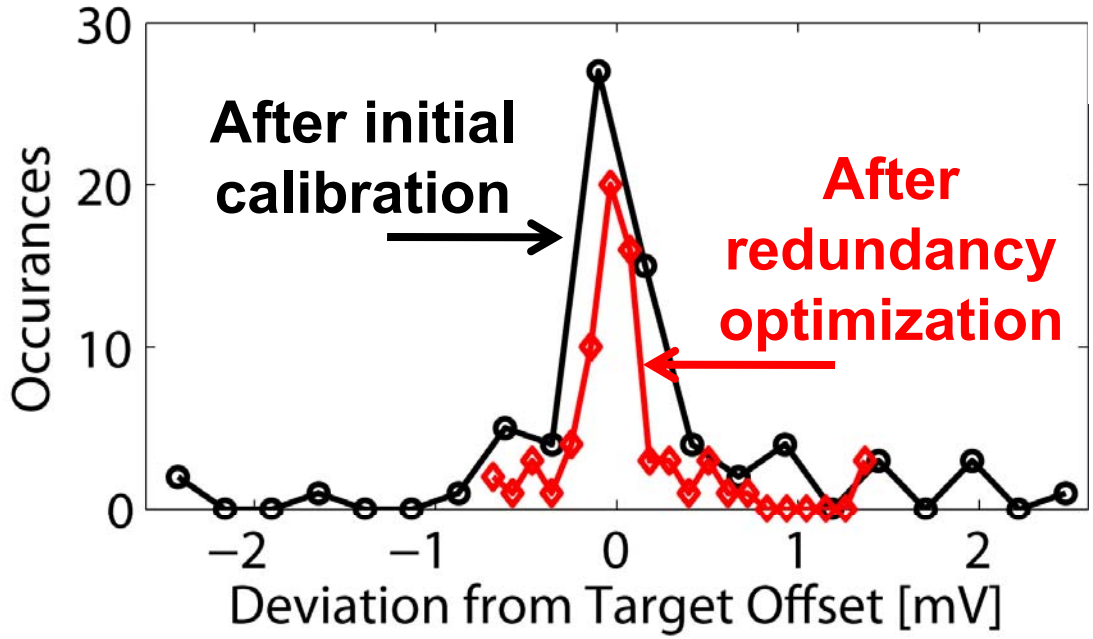

Configuration redundancy improves the standard deviation of offset errors by 1.5-2.5X

Receiver Digital Back End: Synchronization

- Four interleaved front-end acquisition (AQ) blocks

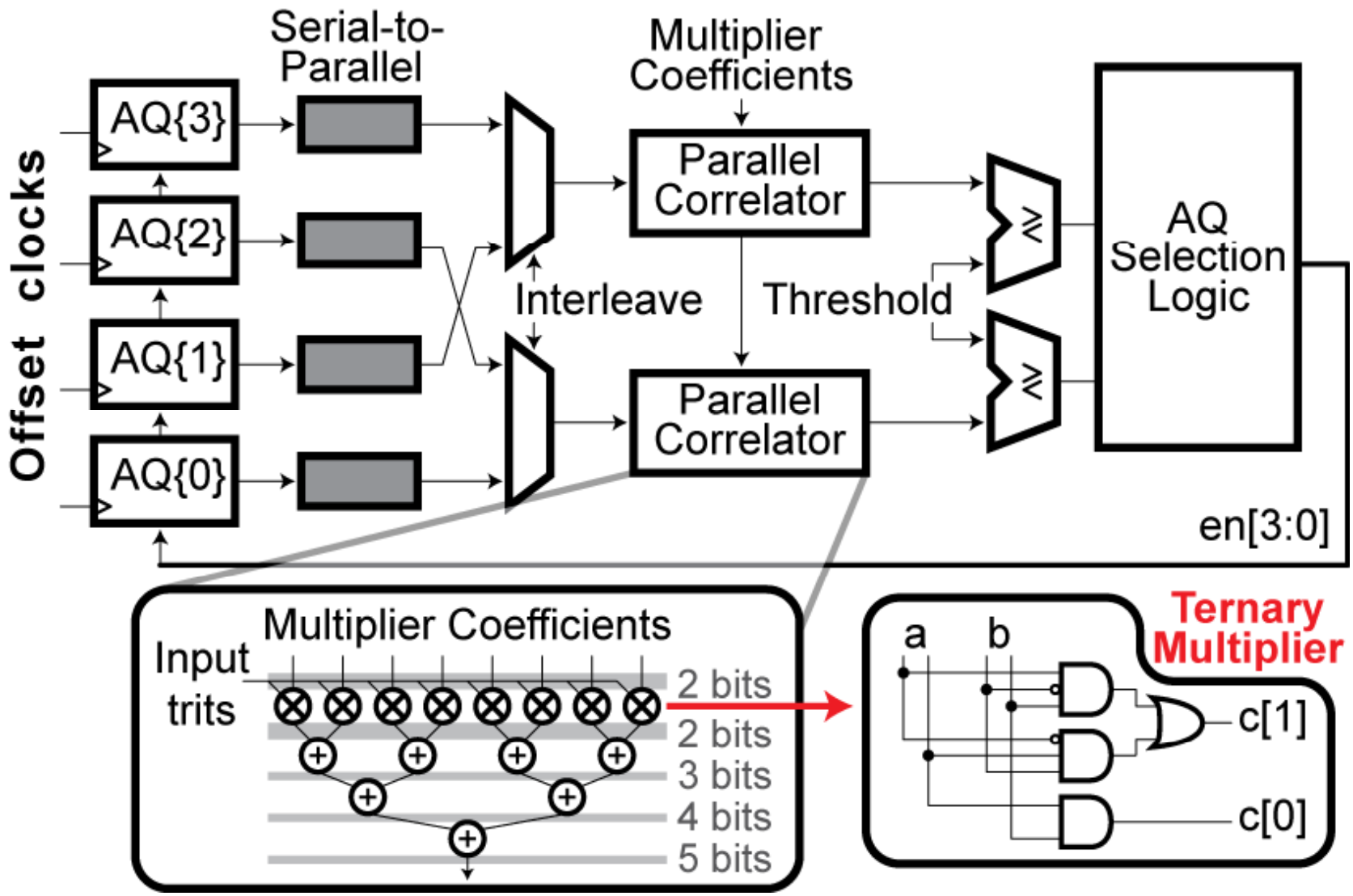

Implemented eTextiles Chip

Chip Summary	
Technology	0.18µm CMOS
Core area	0.83mm^2
V_{DD}	0.9V
Clock frequency	10MHz
Modulation	NRZ supply-rail-coupled differential ternary

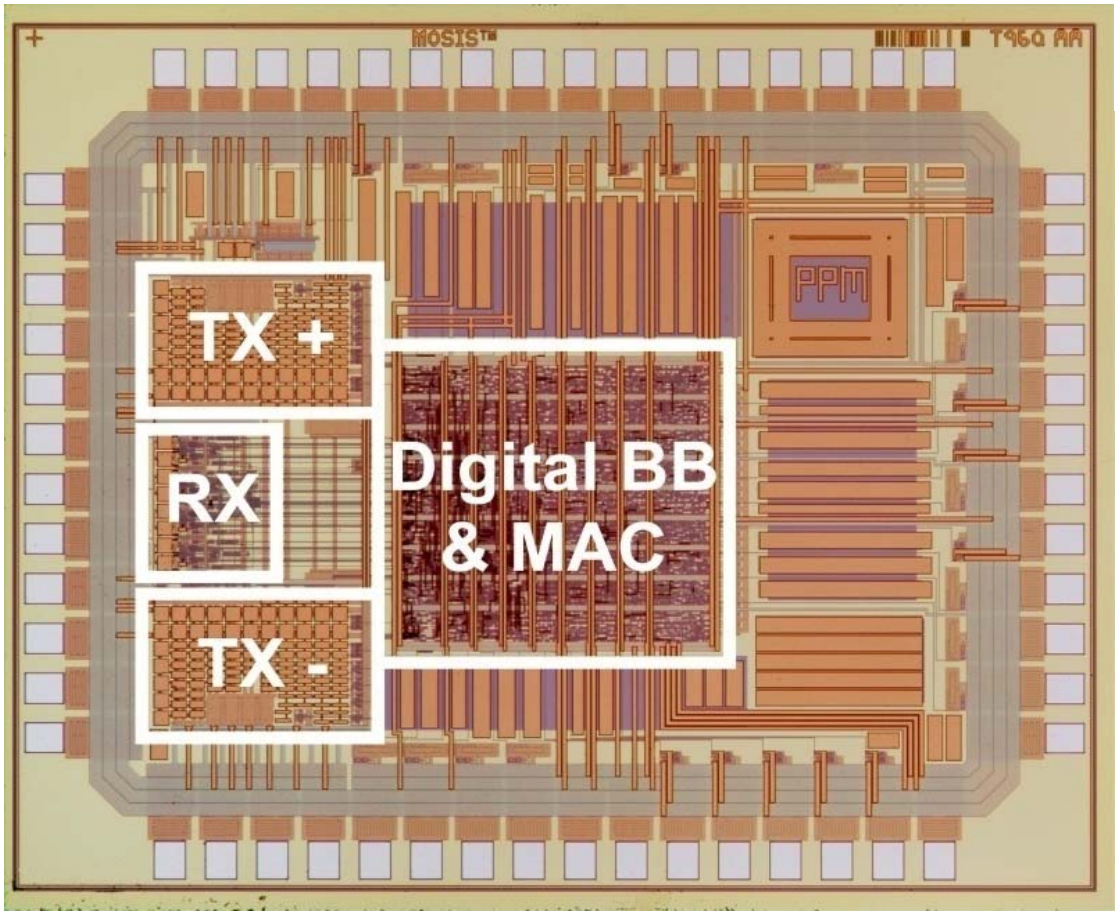

Transient Measurement Results: Small TDMA Packet

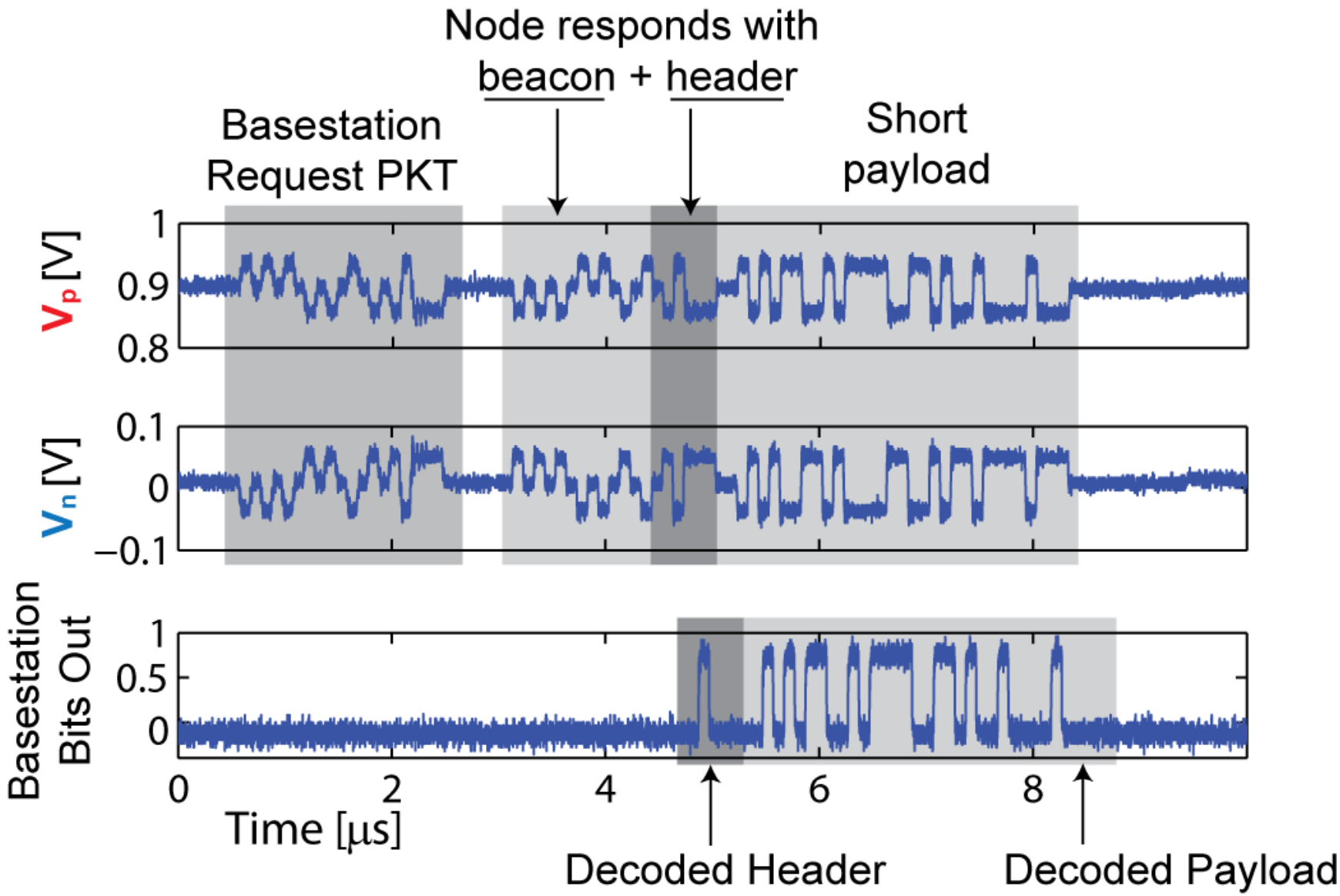

Measured BER & Energy/Bit Performance

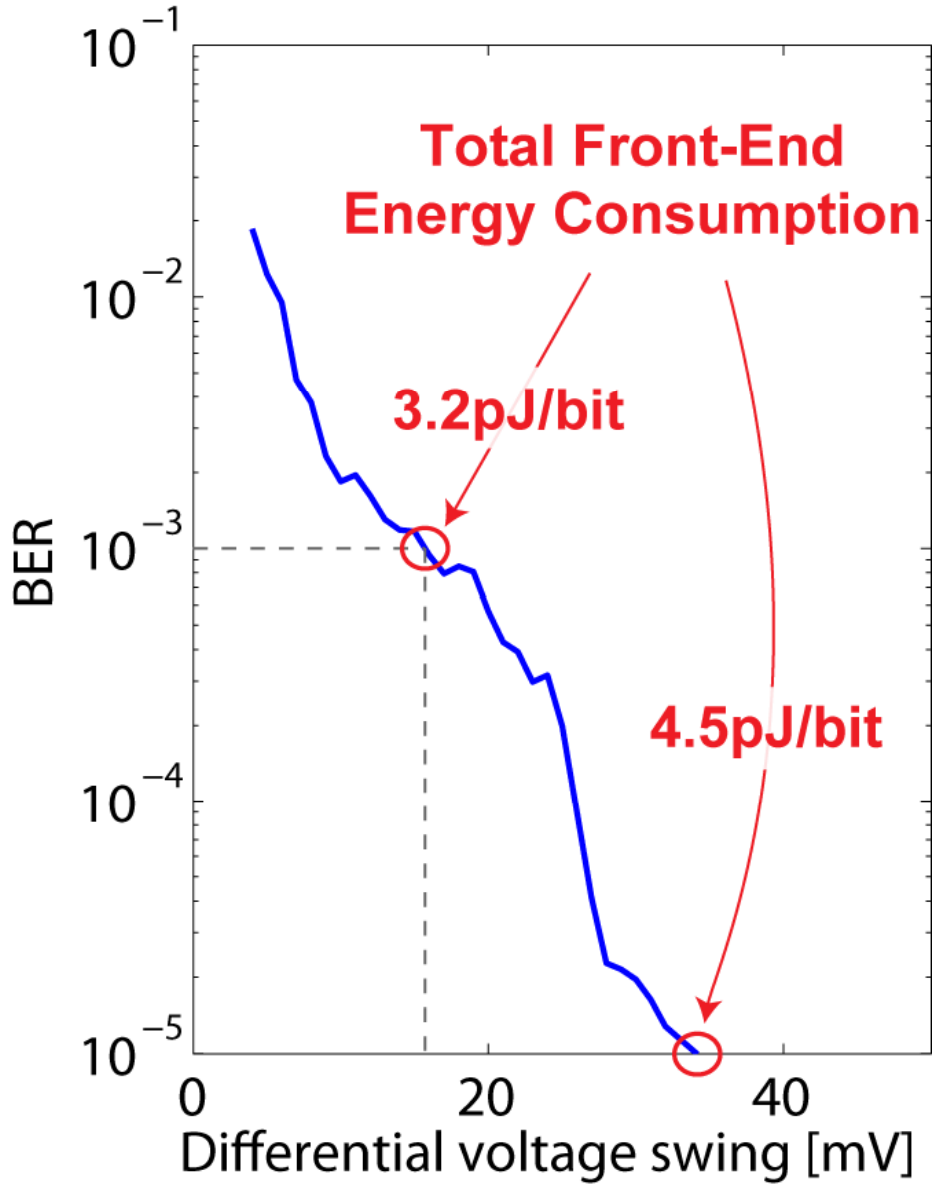

Summary	
TX voltage swing	6 - 290mV
TX front-end energy/bit	0.7 - 18pJ
RX front-end energy/bit	2pJ
RX 10^{-3} sensitivity	15mV
Range	1m

Comparable systems for ~1m BAN communications

	Verhelst ISSCC 2009	Cho ISSCC 2008	Yoo A-SSCC 2008	Yoo A-SSCC 2008	**This Work**
Type	UWB	BCC	Wireless eTextiles	Wired eTextiles	**Wired eTextiles**
RX FE E/bit	45pJ	225pJ	1.1pJ	*	**2pJ**
TX FE E/bit	*	70pJ	2.9pJ	*	**0.7 – 18pJ**
RX & BB Pwr	4.3mW	3.7mW	0.18mW	2.7mW	**0.11mW**
Range	10m	1.8m	0.01m	0.85m	**1m**
Data Rate	40Mb/s	10Mb/s	10Mb/s	10Mb/s	**10Mb/s**

20-100X more efficient than wireless or body-coupled communication

Conclusions

- **Key goal:** move complexity away from the places where weight & volume (thus energy) are restricted
- Two-wire eTextiles system enables at least **20X more energy efficient** communication
  - Security & privacy benefits
- Supply-rail-coupled transmitting and sampling enables time-sharing of the medium between communication and remote powering
  - Remote power transfer with > 95% efficiency

Acknowledgements: FCRP C2S2, Intel Ph.D. Fellowship, NSERC Scholarship